Modification to run CPU09CMI on 5MHz bus.
Read FLPMIN_M.

Now we need the Q clock on the 09FLP

Replace xtal into 20MHz.
Replace C1 and C2 by 15pF.
Place 10M smd between crystal pins.
Replace GAL CMI_1 by CMI-4_1
Only use the HD63C09.

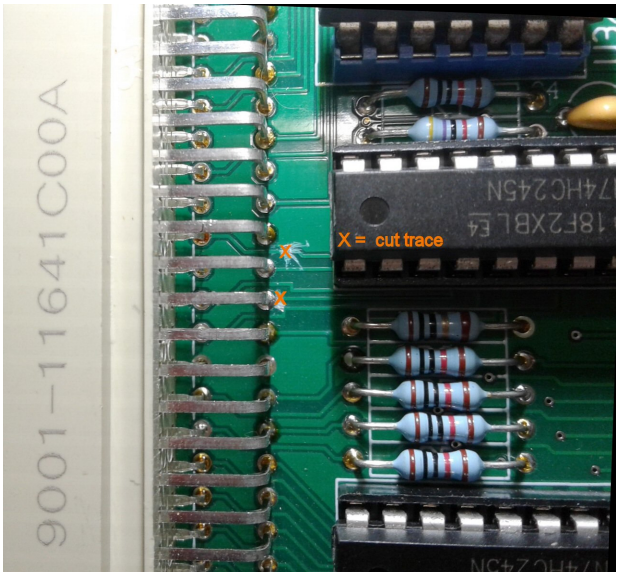

On top side:
Cut trace between U4-14 and J1 C-21 (B_VMA-)
For REV:0.9 print only cut trace from J1 A23 to R15

On solder side:
Cut trace between U13-19 and via (OVMA-)
Place 22K resistor between U13-19 and Gnd
Place wire from U6-35 to U13-19 (blue) and U4-6 (Q) (yellow)
Place wire from U4-14 to J1 A-23 (B_Q) (yellow)
>> Place wire from U14-18 to J1-C29 (red) >>

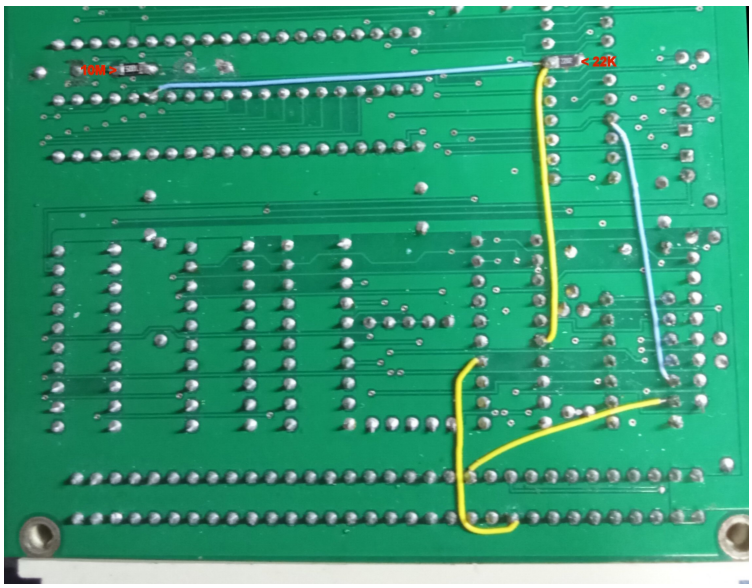

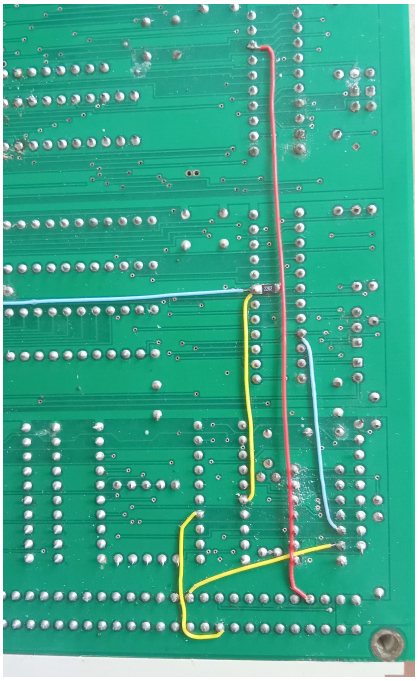

Place wire from U3-7 to J1 C-21 (B_VMA-) , **Or:**
To keep CPU09CMI 68x02 compatible
or need VMA- signal with 68x02 on the bus
for CPU09GPP or CPU09RAM card.

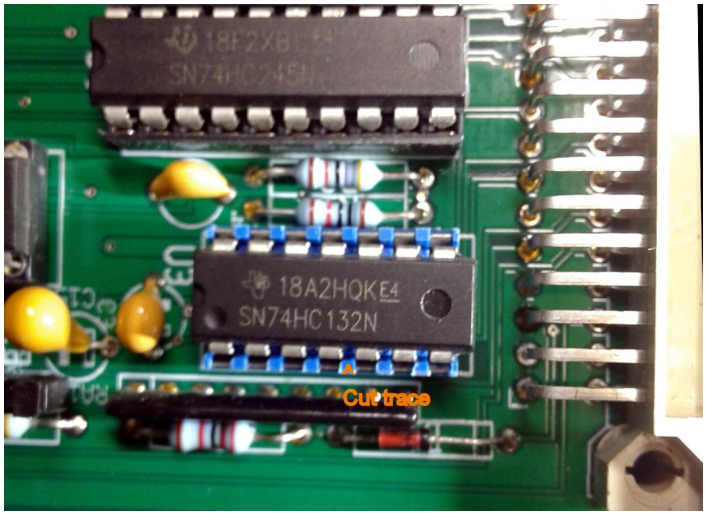

On top side:
Cut trace between U3-4 and U3-5

On solder side:
Place wire from U3-5 to U13-9 (VMA) (blue)
Place wire from U3-6 to J1 C-21 (B_VMA-) (yellow)

Remarks:
Works with MC6850, MC68B50, HD6350, HD63B50.
*CPU09RAM, CPU09IDE works fine. *FLXMIN + 09FLP read FLP_MRDY.
Should work on REV:0.9 and REV:1.1 print
With xtal up to 12 MHz and correct GAL's the S6802, MC68B02 still works on this board.
* Update the GAL for this bus speed.

CdeJ